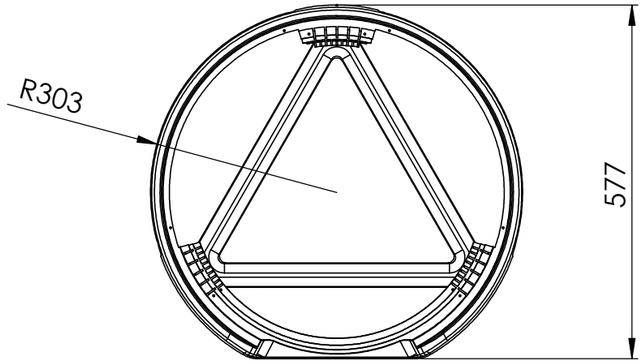

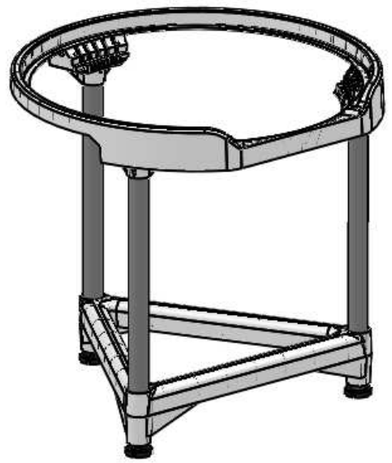

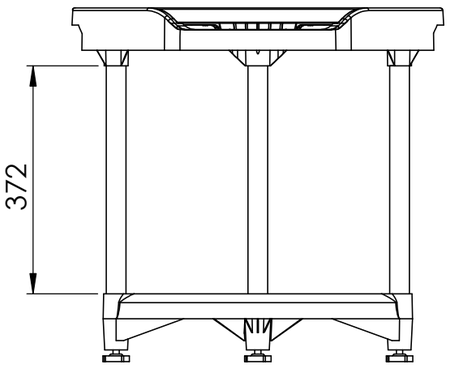

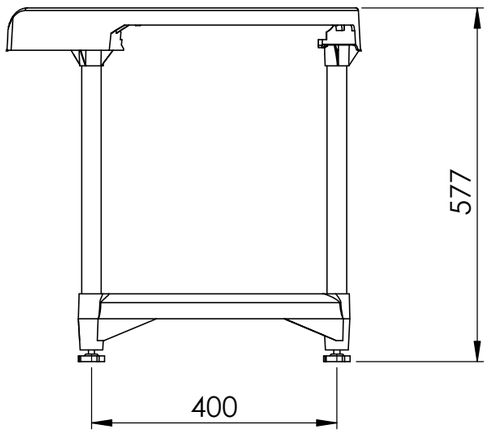

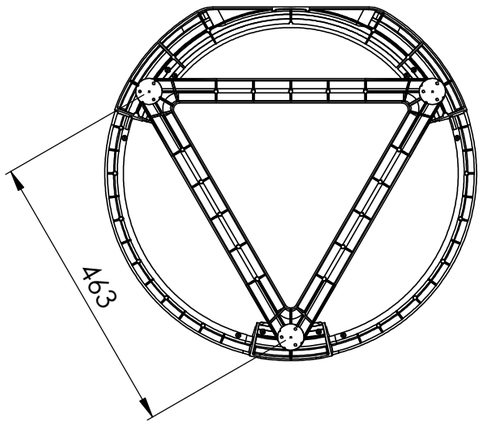

Para Nuos Split 3078042

Modification description	Designer	ECN Modification	Date	Code	RL

Document code	Precision level for dimentions without tolerance indications has to be: ☐ FINE ☐ MEDIUM ☐ COARSE ☐ VERY COARSE EN 22768	ECN first creation	Date 19/06/19
			Designer L. Cesetti
(F) = 0 (R) = 0 (S) = 0		Drawing format A3	Scale 1:10

Conformity requirements see the document named "Product Conformity Requirements N.R&D.TB005Tt"

Material

Treatment

ARISTON THERMO GROUP

Via A. Merloni 45
Fabriano (AN)
60044 Italy

Finishing | Replaces

Description: SUPPORT HPWH | Code: 3078042

BY TERM LAWS WE RESERVE THE PROPERTY OF THIS DRAWING WITH PROHIBITION OF USE AND REPRODUCTION